EarthWay® EV-N-SPRED

Operation and Assembly Manual
for the **M30**
12-volt **ATV** Broadcast Spreader

5-YEAR LIMITED WARRANTY

Earthway Products, Inc. warrants this product free of defects in original workmanship and materials for a period of 5-Years to the end user with the original purchase receipt. If a manufacturing non-conformance is found, Earthway Products, Inc. at its discretion will repair or replace the part(s) or product at no charge provided the failure is not the result of incorrect installation, mishandling, misuse, tampering, or normal wear and tear as determined by Earthway. Earthway at its discretion may require that the part(s) or product be returned along with the original purchase receipt at owners' expense for examination and compliance with the terms of this warranty. Do not return any product without first receiving authorization from Earthway Products, Inc. To seek remedy under this warranty, contact Earthway Products, Inc. at 574-848-7491, techsupport@earthway.com or write to Earthway Products, Inc. P.O. Box 547 Bristol, Indiana 46507 and describe the nature of the manufacturing defect. **SPECIFIC LIMITATIONS:** This warranty covers only the part(s) or product; any labor charges associated with repair or replacement of non-conformances are specifically excluded. Due to the corrosive nature of most fertilizers and ice melt products, Earthway Products, Inc. makes no warranty against and specifically excludes part(s) or product degradation or failure due to corrosion or its effects. Only use granular materials, the use of Rock Salt or other large size material will void the warranty. ***Clean and dry*** your spreader thoroughly after each use, as a preventative measure, coat all metal parts (inside and outside of the steel tubing) with a light oil or silicon spray.

9-2014 Part # 52195

Assembly Instructions:

STEP 1: Unpack all parts from shipping carton to ensure no parts are missing. Refer to the exploded view.
STEP 2: Remove two (#27) 1/4-20 x 1/2" shipping bolts and two (#21) 1/4-20 lock nuts from the motor support assembly and the hopper. The 1/4-20 x 1/2" shipping bolts are no longer required and can be disposed of, keep the two 1/4-20 lock nuts for the next step.
STEP 3: Next install (#4) four 1/4-20 x 1-1/2" bolts through the motor support assembly and then through the hopper. Now attach (#16) frame to each side as shown above. ***NOTE***: Keep in mind that you may need to remove one frame tube to fit through the tubular luggage rack if your quad is equipped with one as shown on the next page.

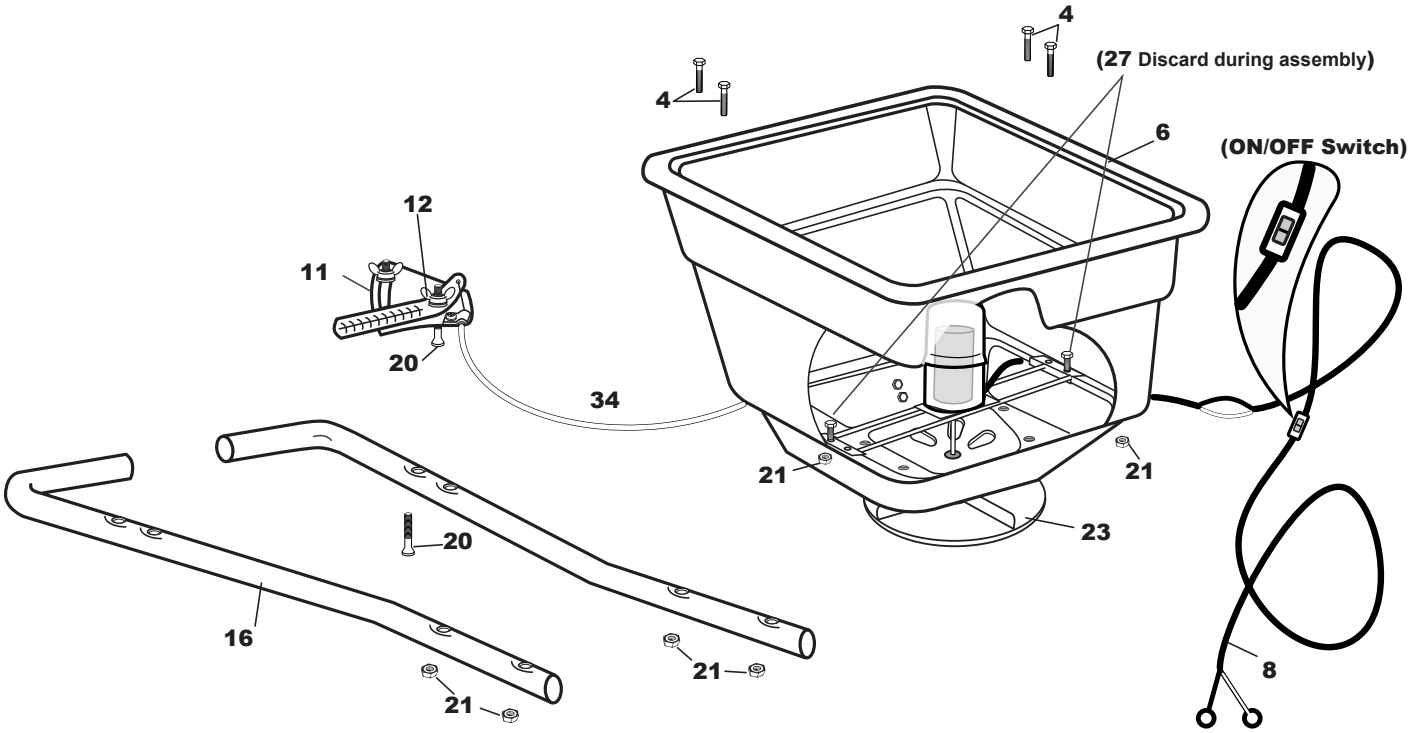

STEP 4: Next remove (#20) from (#11) Gauge & Lever assembly. Depending on whether the M30 is mounted to the front or rear rack, you will need to install (#11) Gauge & Lever assembly to either the right or left (#16) Frame tube to allow for use with the non-throttle hand. Insert (#20) from the bottom of (#16) Frame and then through (#11) Gauge & Lever assembly, and then secure with the wing nut and tighten firmly to allow movement and not allow the lever to move unassisted.

STEP 5: Now install the M30 on your quad as outlined on the following page.

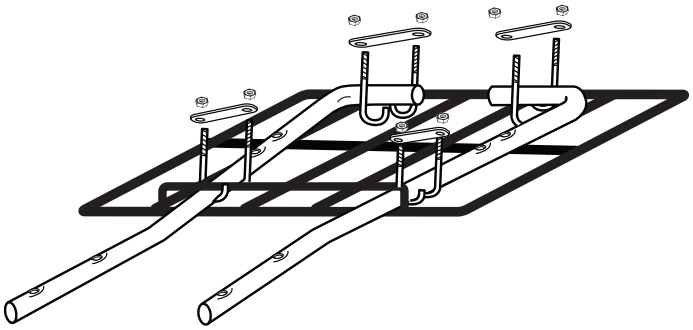

Electric Spreaders
Model M30

EarthWay® EV-N-SPRED

- Always wear protective clothing, eye wear, and dust mask to prevent contact with chemicals and other materials being applied with this machine.
- Remove any material in the hopper before lifting or detaching this machine from the vehicle.
- Care must be taken when lifting this machine so as not to cause personal injury or equipment damage. Never attempt to install this machine to the vehicle alone. Recruit the help of someone to assist when attaching and detaching this machine from the vehicle.
- Refer to the material packaging or the Material Safety Data Sheet for precautionary measures required when handling materials to be applied.
- Before attaching this machine, consideration must be given to the load capacity of the vehicle. Refer to the owner's manual of the vehicle for rated load capacity. Be sure to take into account the weight of this machine is 20lbs. and the weight of the material to be placed in the hopper when calculating the total load.

WARNING

KEEP HANDS AWAY FROM ANY SPINNING OBJECT, SHUT-OFF PLATE, SHUT-OFF MECHANISM LINKAGE, AND THE INSIDE OF THE HOPPER, <u>EXTREME INJURY CAN OCCUR</u>.

<u>HOW TO OPERATE SAFELY:</u>

- Read, understand, and follow all product label information provided on the material being applied.
- An adjustable solid stop is provided that allows the operator to adjust to the desired opening position on the rate setting control prior to operation of the vehicle. This allows repeatability to the stop without the need to look at the control while operating the vehicle.
- Establish the correct rate and then lock the stop in that position using the thumb wing nut on the setting control.

<u>OPERATING INSTRUCTIONS:</u>

Before filling hopper, become familiar with the operation of this spreader. (Practice the following steps)

- Turn the motor switch to the ON POSITION, so that the impeller is turning before going on to the next step.
- While driving forward pull the lever back to the stop, this opens the shut off plate on the spreader.
- To stop the flow of material, Push the lever to "0" or closed position, then turn the motor off when finished.
- When finished empty any remaining material from hopper.
- Thoroughly wash spreader and allow to dry before storing. A light coating of oil will help prevent corrosion of all metal surfaces.

<u>MOUNTING INSTRUCTIONS:</u>

Position the M30 on the vehicle so that the impeller is positioned to be able to spin clear of any part of the vehicle, this will allow a full 180 degree spread pattern. Secure the frame to the mounting location with the enclosed J-Bolts at positions that will secure the spreader so that it will not move when operating the vehicle. For best results mount the spreader so that the impeller is as close to the vehicle as possible, but clears any parts on the vehicle and place the J-Bolts as shown below.

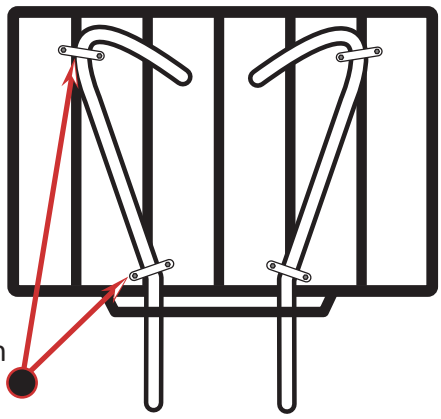

Connect the black wire (ground) to the negative (-) post on the battery and the fused wire to the positive (+) post on the battery. The impeller must spin clock-wise.

EarthWay® EV-N-SPRED

SPREADER CALIBRATION INSTRUCTIONS:

- Loosen stop on the gauge and set to #30
- Open the lever to #30 and make sure that the shut-off is fully open
- Loosen the cable clamp on the bottom of the hopper and slide the outer cable IN/Out until the shut-off is fully OPEN. Tighten the cable clamp and retest.
- Calibration is now complete

TO CALCULATE THE SETTING:

Determine how much material is to be applied per 1,000 sq/ft.

- Measure off a distance of **50 feet**, preferably on a paved surface such as a parking lot.
- Weigh out enough of the material to be applied to fill the hopper at least half full. Record the weight for future use.
- With the unit mounted on the vehicle and the hopper at least half full of the material to be spread, position the vehicle far enough before the beginning of the 50 foot test area so that the vehicle will achieve the desired speed before you reach the starting line.
- Set the rate setting stop at a position that you feel would be an appropriate setting.
- Start the vehicle in motion and as you cross the starting line (of the 50 feet) move the rate lever to the open position against the stop. Take care to be aware of what is going on around you maintaining control of the vehicle.
- Continue from the starting line with the unit spreading the material. As you cross the finish line move the rate lever to the closed position.
- Stop the vehicle and note the width of the spread path that was just completed.
- Return to the start point and empty the remaining material from the hopper into your weighing container and re-weigh.

RATE SETTING WORKSHEET

Desired Application Rate (lbs/1,000 sq ft) _____

To determine the desired application rate divide the area (sq ft) the bag should cover by the weight of the bag, then multiply by 1,000. (Example: 5,000 sq ft / 25 lbs = .005 x 1,000 = 5)

	_____	**Weight of Material Placed in Hopper**
Subtract	_____	**Weight of Material Left in Hopper**
Equals	_____	**Weight of Material Used**
	50	**Length of Test Area (50 from above)**
Multiply	_____	**Width of Spread Area**
Equals	_____	**Total Spread Area**

Divide the Weight of Material Used by the Total Spread Area = _____ lbs\sq ft

Multiply the lbs\sq ft times 1,000 = _____ lbs\1,000 sq ft

Compare the results of your test to the desired application rate.

Adjust the rate setting stop accordingly and run through the test again.

Repeat this process until you have achieved the desired application rate.

Earthway Products, Inc.
P.O. Box 547
Bristol, Indiana 46507
USA

EC DECLARATION OF CONFORMITY

(Machinery Directive & Electromagnetic Compatibility Directives)

Herewith we declare that the machinery described below is in accordance with the relevant health and safety requirements of the EC Council Directives concerned with Machinery and Electromagnetic Compatibility. No alterations are to be made to the machine without prior consultation and approval of Earthway Products, Inc. otherwise the Declaration may become invalid. This equipment must be commissioned, used and maintained strictly in accordance with the operating and maintenance instructions issued with the machine. Operators must be trained in accordance with the recommendations given in the operating and maintenance instructions issued with the machine.

Description of Machine: **EarthWay® M30 12-volt Broadcast Spreader**

Serial Number: AS STAMPED ON MACHINE

Date of Supply: AS INVOICED DATE

Relevant EC Council Directives:
Machine Directives 89/392/EEC and subsequent amendments.

Electromagnetic compatibility Directive 89/336/EEC and subsequent amendments.

Issued by: Jeffrey D. Kendall on behalf of Earthway Products, Inc.
Signed by: J. Kendall

Date: September, 2014
Position of Signatory: Vice President Sales & Marketing

DO NOT RETURN TO DEALER FOR REPAIR

EARTHWAY PRODUCTS, INC.
1009 Maple Street
P.O. Box 547
Bristol, IN 46507

FOR YOUR RECORDS

Date Purchased: _____
Store Name: _____

EarthWay
EV-N-SPRED

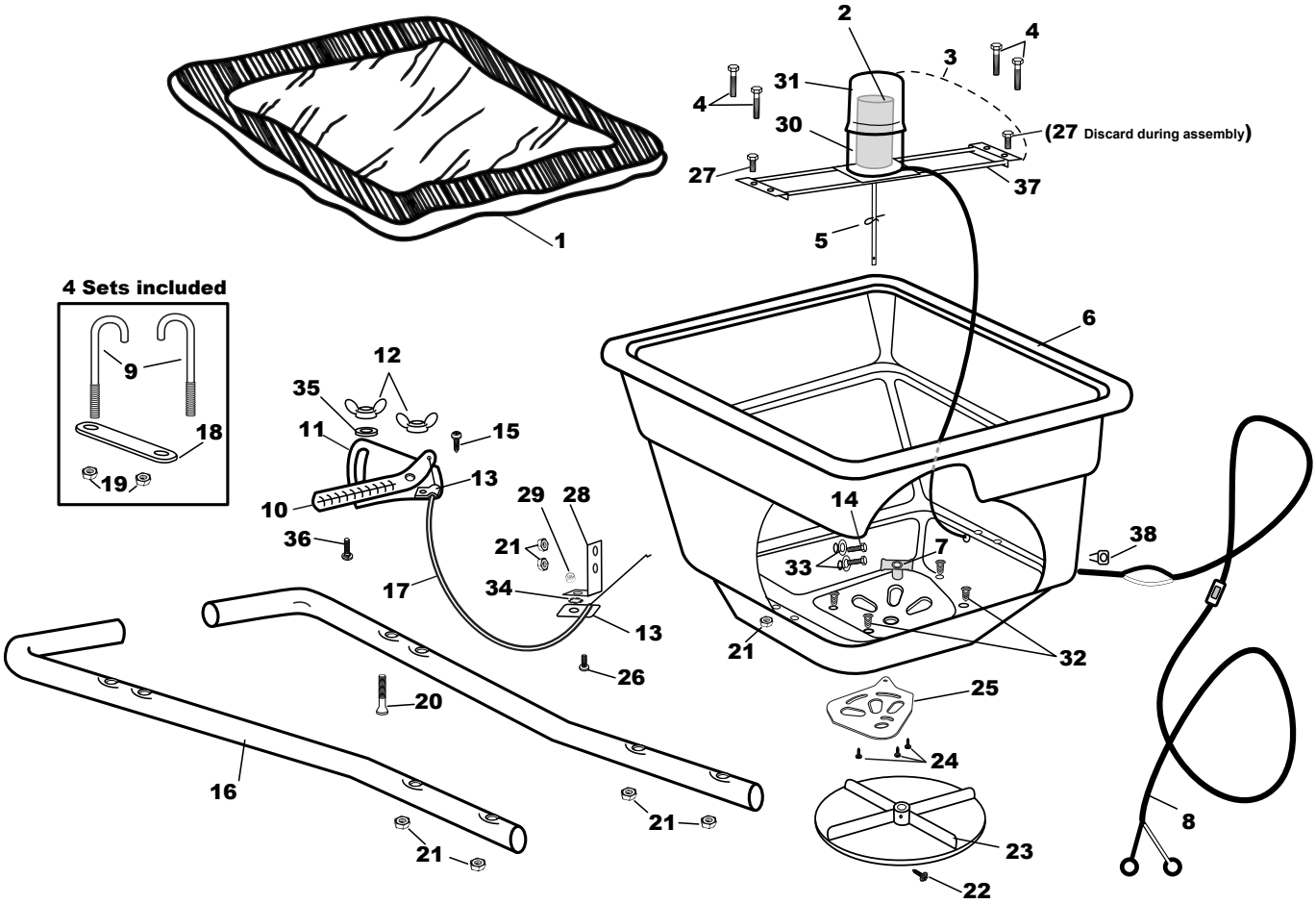

M30 Parts List

Key #	Part #	Description	Key #	Part #	Description
1	77002	HEAVY DUTY RAIN COVER PLAIN	20	31154	1/4-20 X 2 FHPMS ZINC
2	77102	ELECTRIC MOTOR DRILLED	21	32103	1/4-20 NYLON INS LOCKNUT ZINC
3	60423	MOTOR ASSEMBLY (M30)	22	31103	#6 X 1/2" TYPE 25 HWHS ZINC
4	31100	1/4-20 X 1 1/2 HHMS ZINC	23	12109	IMPELLER (9" DIA)
5	33100	HAIR PIN CLIP ZINC (#213)	24	31138	#8 X 3/8" PMT #8 HD COARSE BLACK
6	12316	HOPPER BLACK (M30)	25	12221	SHUT OFF PLATE
7	12209	HOPPER BUSHING	26	36211	10-24 X 3/4" PHMS S.S.
8	60511	WIRE HARNESS ASSEMBLY (M20/M30)	27	31165	1/4-20 X 1/2 HHMS ZINC
9	44287	"J" BOLT (M30/M20)	28	42273	CABLE BRACKET (M30)
10	12125	LEVER	29	36301	10-24 NYLON INSERT LOCKNUT SS
11	12124	GAUGE ASSEMBLY	30	12309	MOTOR BASE
12	60027	WING NUT ASSEMBLY BLACK	31	12311	MOTOR CAP
13	12319	UPPER HOUSING CLIP	32	19162	PANEL FASTENER BLACK (354-310102-00-0108
14	31101	1/4-20 X 3/4" HHMS ZINC	33	12140	FRICTION WASHER (GAUGES)
15	31133	#8 X 3/4 PHPS TYPE A (BLACK)	34	34106	1/4" EXT. TOOTH LOCK WASHER ZINC
16	25117	FRAME (M30) ea	35	12243	GAUGE SPACER
17	60371	WIRE HOUSING ASSEMBLY M30	36	37109	1/4-20 X 1 1/4" CARRIAGE BOLT ZINC
18	43050	U-BOLT STRAP	37	60328	MOTOR SUPPORT ASSEMBLY
19	32100	1/4-20 HEX NUT ZINC	38	77032	STRAIN RELIEF (#1184) HEYCO